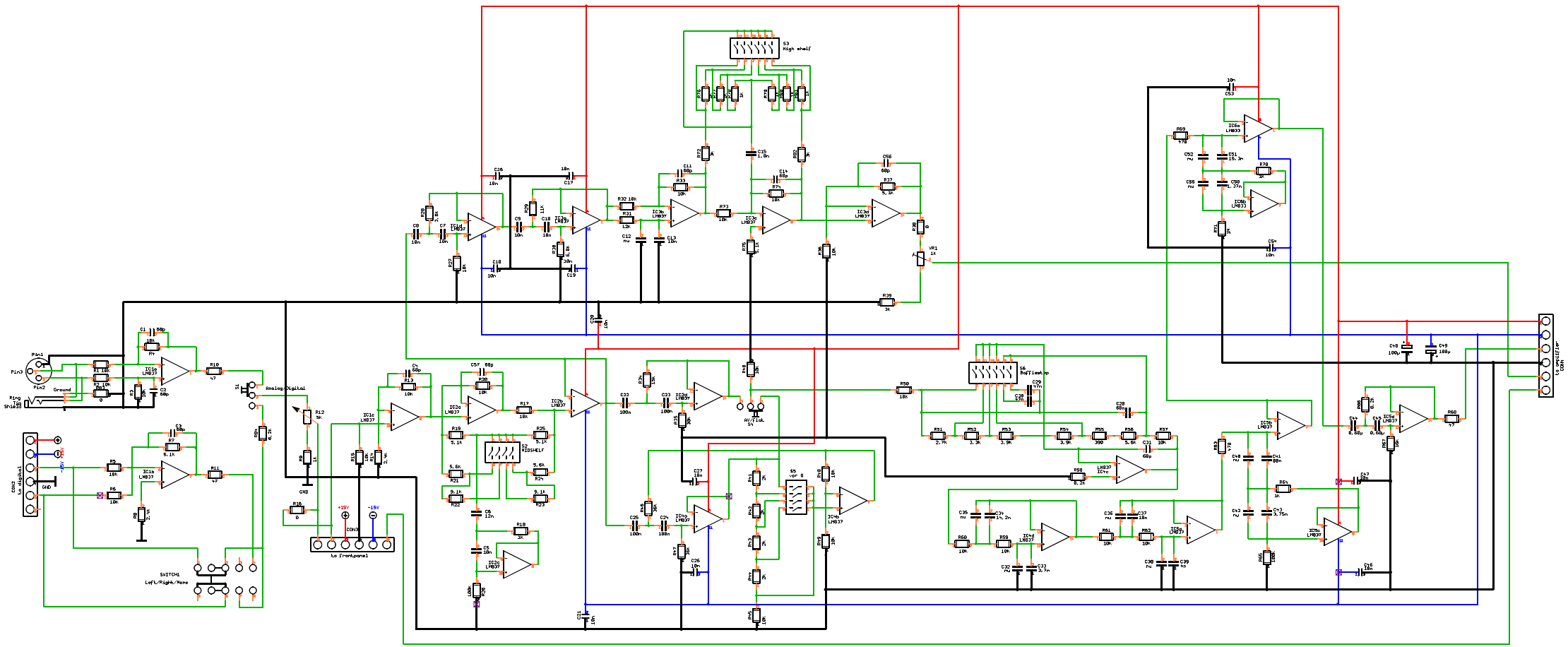
S3
High shelf
S6
Bafflestop
S2
MIDSHELF
S5
vor 0
Analog/Digital
SWITCH1
Left/Right/Mono
to frontpanel
to amplifier
CON1
CON2
Ground
GND
+15V
-15V

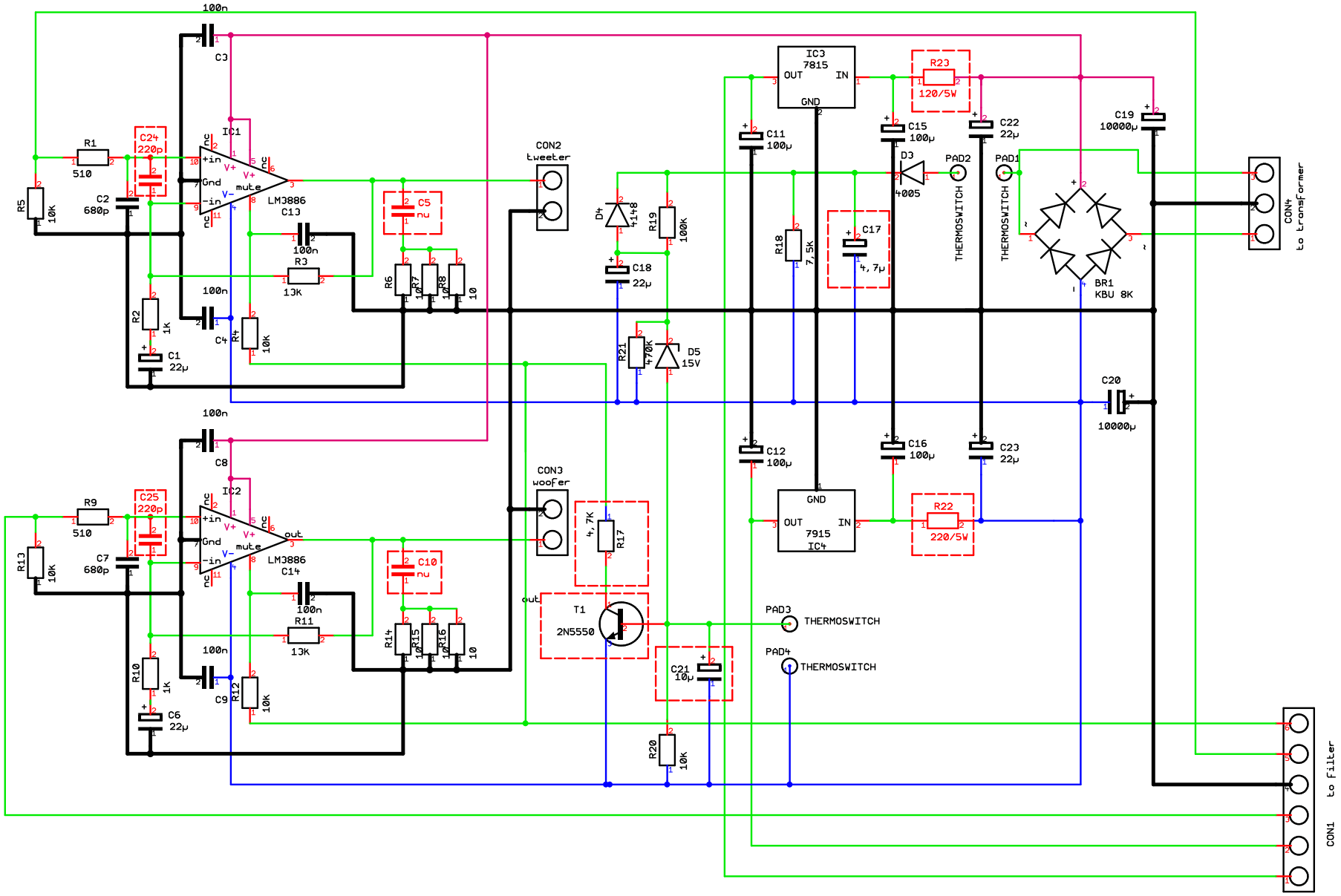

TANNOY		REV	5.0
TITLE	7600 1556 Power AmplifierR6/P6		
DATE	01.05.05	DRAWN	Walter Fuchs
TIME		PAGE	1 OF 1